OPTION TIPS

SS-8300 · SS-8400

Super Tip

85-05-001 (Standard)

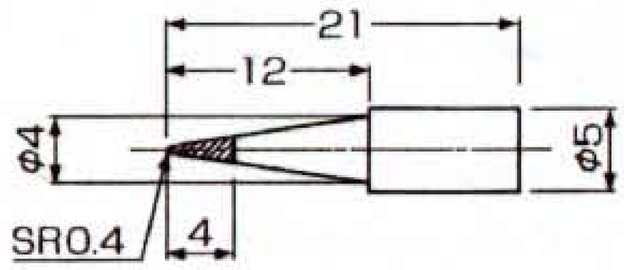

85-05-002

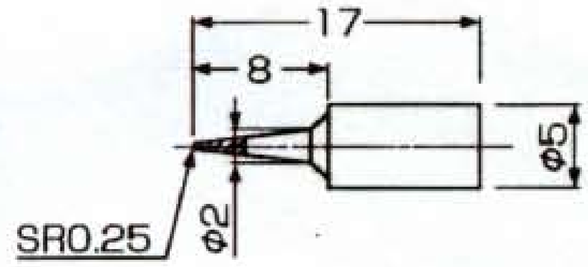

85-05-003

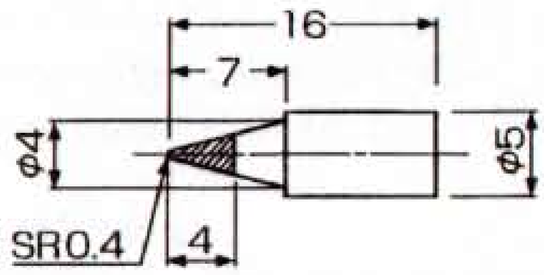

85-05-004

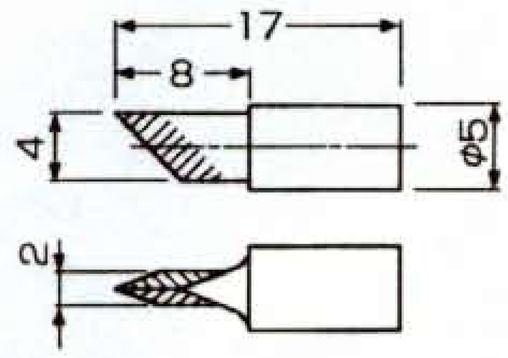

85-05-005

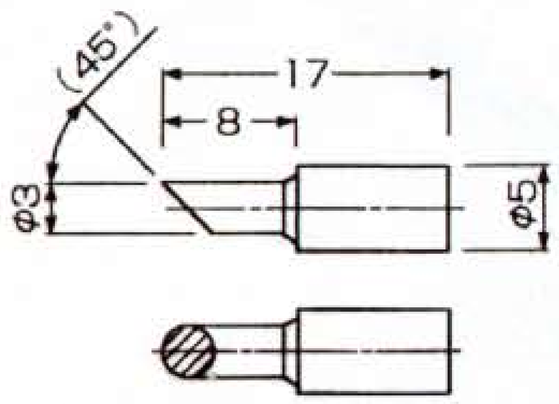

85-05-006

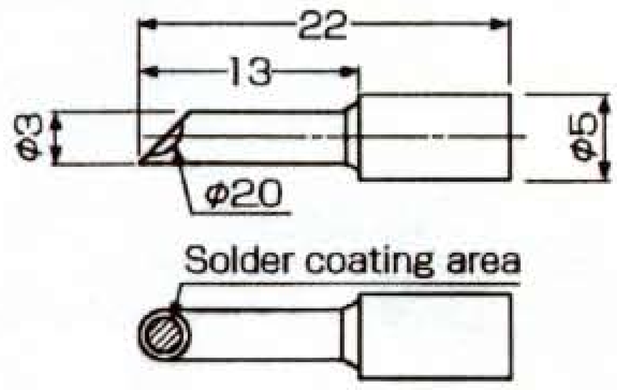

85-05-007

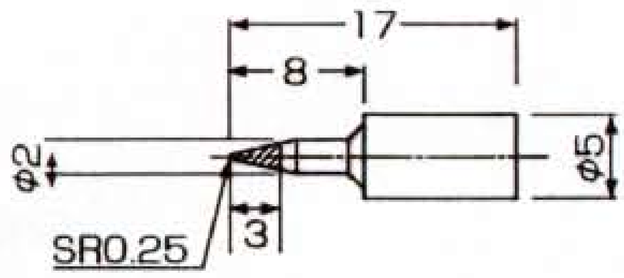

85-05-008

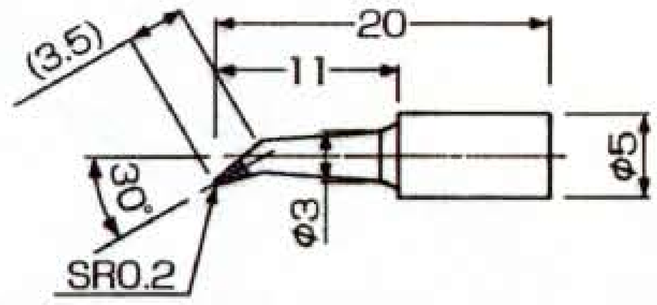

85-05-009

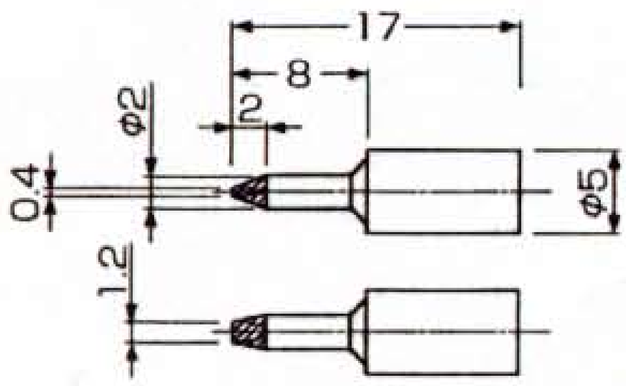

85-05-010

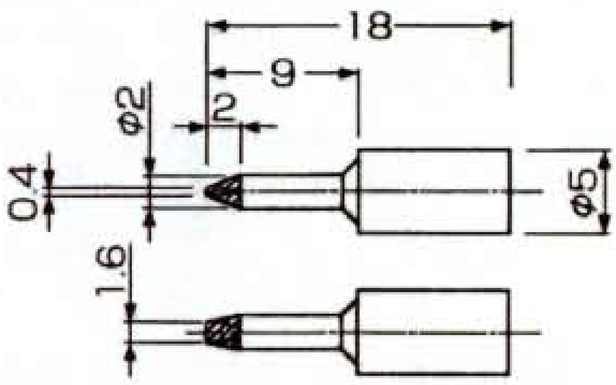

※ Special order made will be arranged at request.

EXPORTER
DIC TRADING CO.,LTD
1-26-10 SEKIMACHI-HIGASHI,
NERIMA, TOKYO 177-0052, JAPAN
TEL [81] 3-3929-6800 FAX [81] 3-3929-7441

MANUFACTURER
DEN-ON INSTRUMENTS CO.,LTD
http://www.denondic.co.jp

ERESCOM VOS
MNÍŠEK 258, 463 22 Liberec, ČR
DISTRIBUTION AND SERVICE
OF NEW TECHNOLOGIES
FOR ELECTRONIC INDUSTRY
TEL./FAX: (048) 514 66 95